STREAMFEEDER ®

Model 3 EX EJ Mechanical Components

Item #	*Page #*	*Assembly #*	*Description*
1	2-11	435-33-018	Wedge Guide Assembly
2	2-6	435-33-004	Table Top Assembly
3	2-5	435-60-003	Left-Hand Side Plate
4	2-13	435-33-031	Feed Driven Shaft Assembly
5	2-14	435-33-036	Belt Support Bearing Assembly
6	2-15	435-33-041	Feed Drive Shaft Assembly
7	2-16	435-33-106	Upper Discharge Assist Assembley
8	2-17	435-33-082	Material Support Assembley
9	2-18	435-33-105	Lower Discharge Assist Assembley
10	2-3	435-33-001	Gate Holder Plate Assembly
11	2-10	235-11-085	EJ Gate Cylinder Assembly
12	2-9	235-11-080	Material Holdown Assembly
13	2-12	435-60-016	Sensor & Extension Assembly
14	2-19	435-11-099	Drive Motor Assembly
15	2-8	435-33-007	Base Plate Assembly
16	2-4	435-60-002	Right-Hand Side Plate
17	2-7	235-11-006	*Tall Insert Guide Assembly
18	2-20	435-60-001	*Model 3 EX Ejector Mounting Plate

*Not Shown in Drawing on Page 2-2

STREAMFEEDER ®

Model 3 EX EJ
Mechanical Components

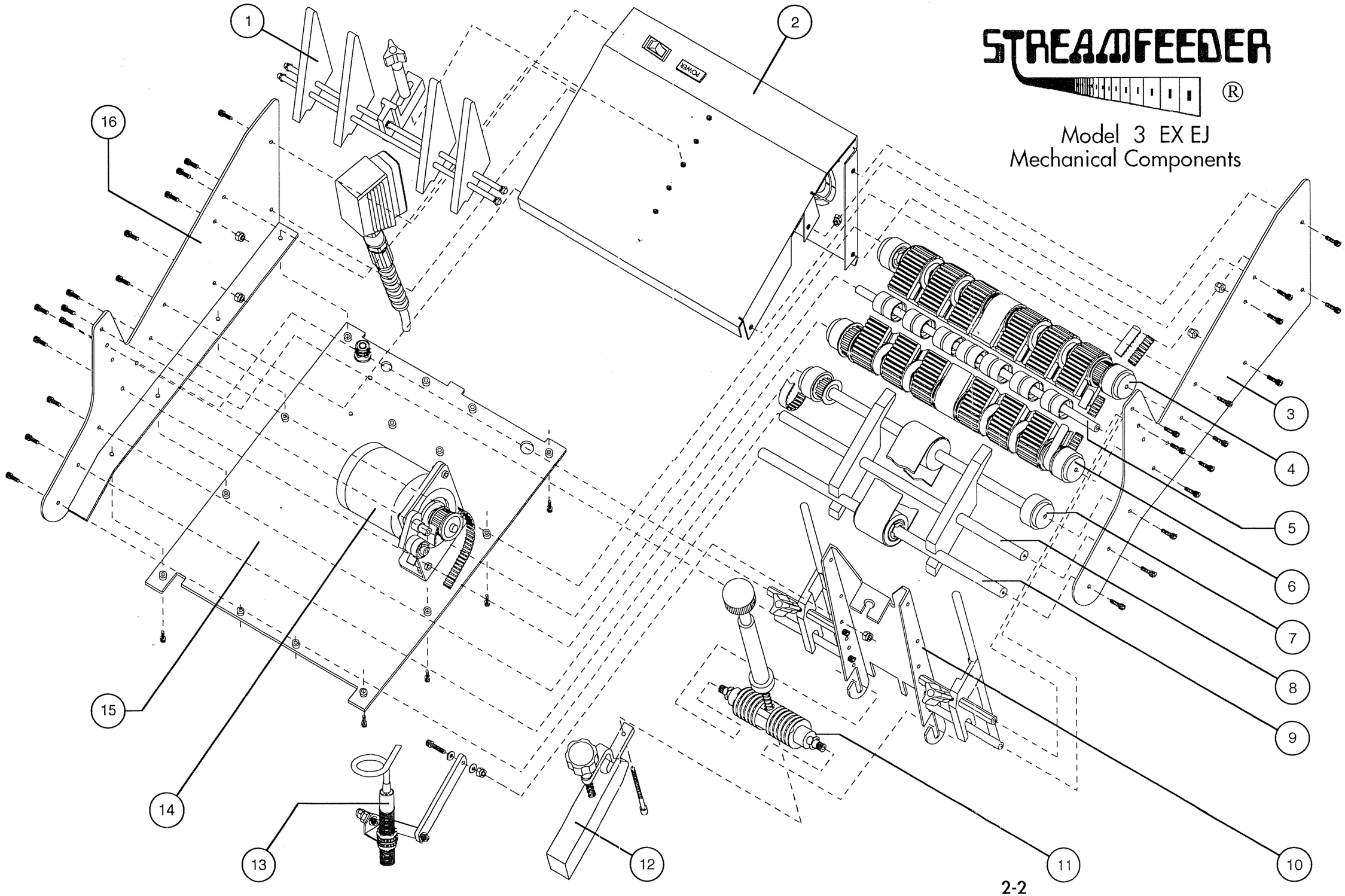

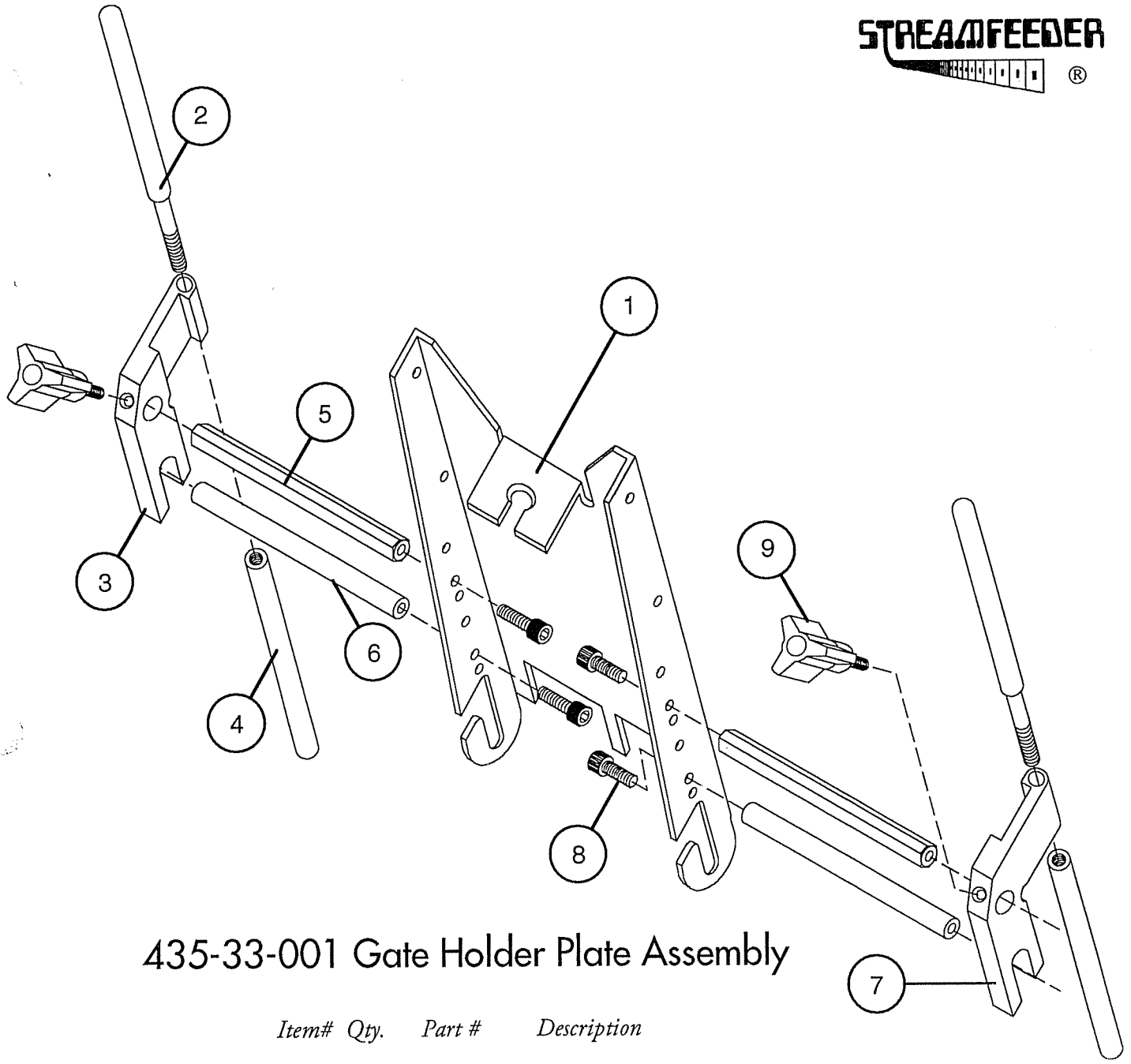

435-33-001 Gate Holder Plate Assembly

Item#	*Qty.*	*Part #*	*Description*
1	1	235-00-001	Gate Holder Plate
2	2	235-00-045	Short Side Guide Shaft
3	1	235-00-047	Left-Hand Side Guide Bracket
4	2	435-00-044	Lower Side Guide Shaft
5	2	435-50-043	Gate Support Shaft
6	2	435-50-049	Lower Gate Support Shaft
7	1	235-00-048	Right-Hand Side Guide Bracket
8	4	2310	SHCS 10-32 x 3/8"
9	2	235-00-092	Medium Knob

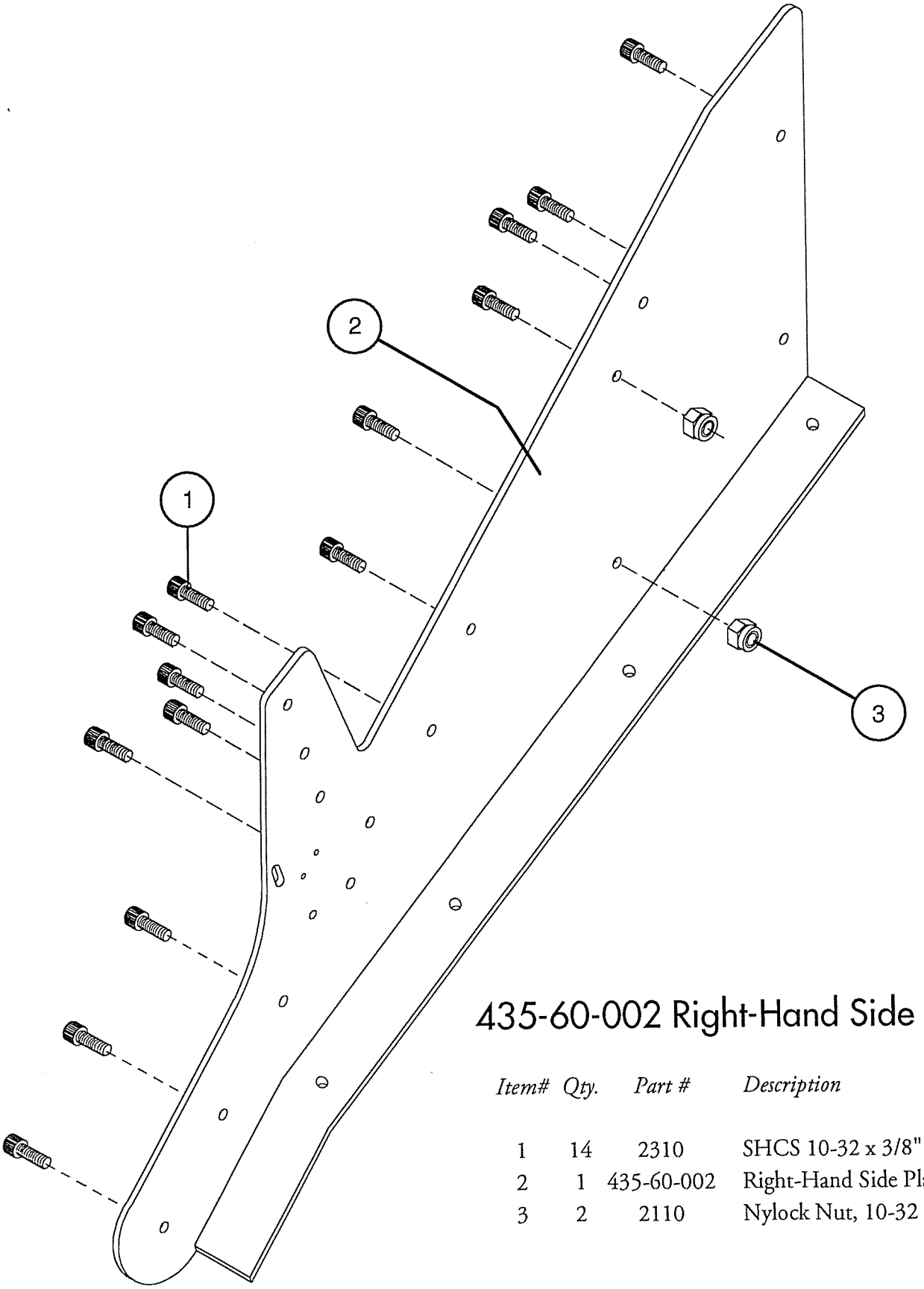

435-60-002 Right-Hand Side Plate

Item#	*Qty.*	*Part #*	*Description*
1	14	2310	SHCS 10-32 x 3/8"
2	1	435-60-002	Right-Hand Side Plate
3	2	2110	Nylock Nut, 10-32

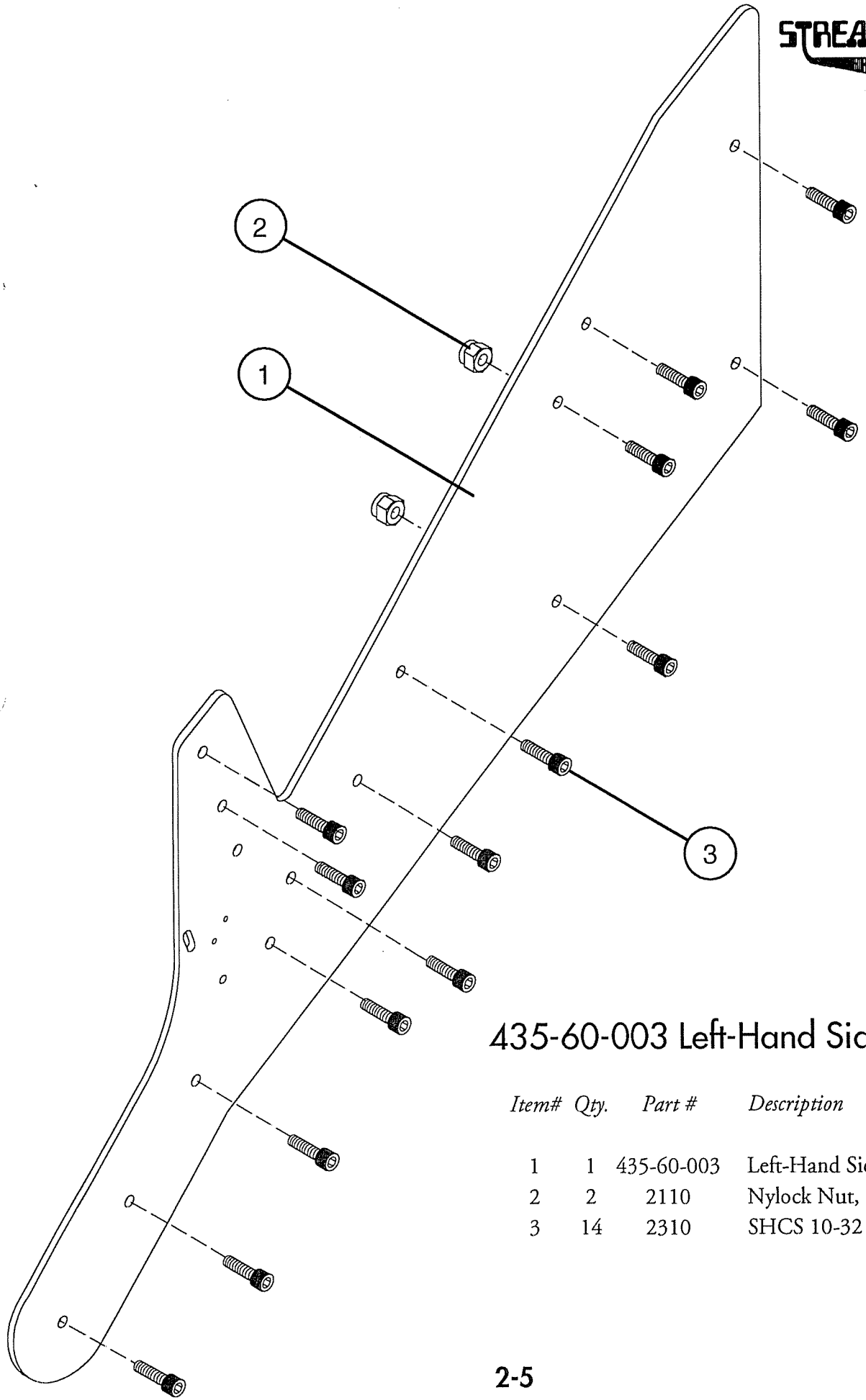

435-60-003 Left-Hand Side Plate

Item#	*Qty.*	*Part #*	*Description*
1	1	435-60-003	Left-Hand Side Plate
2	2	2110	Nylock Nut, 10-32
3	14	2310	SHCS 10-32 x 3/8"

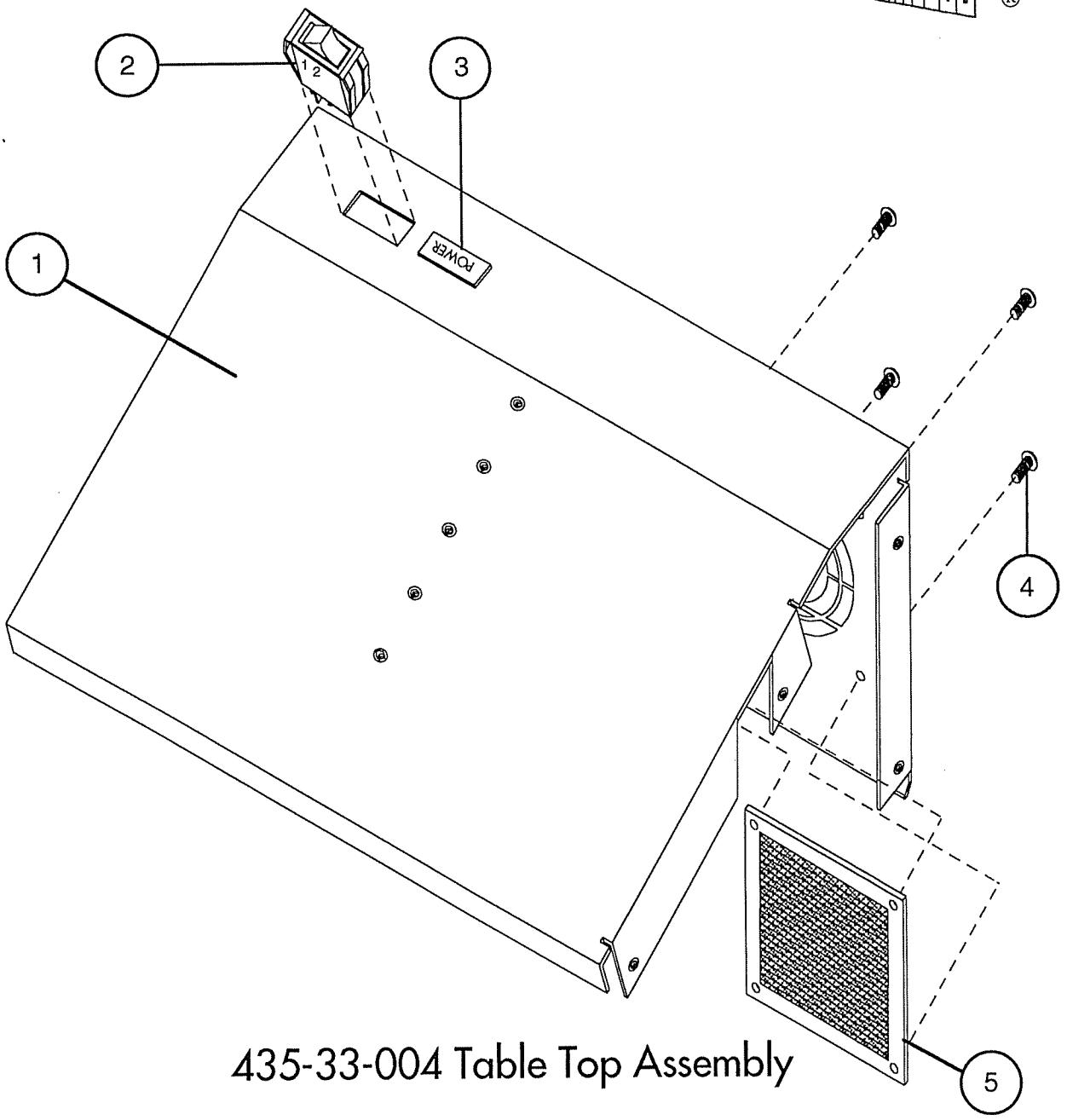

435-33-004 Table Top Assembly

Item#	*Qty.*	*Part #*	*Description*
1	1	435-50-004	Table Top
2	1	535-00-014	On/Off Switch
3	1	535-00-023	Legend, "Power"
4	4	2305	10-32 x 3/8" BHCS
5	1	535-00-105	Filter Screen
NS	1	235-00-064	USA Label
NS	1	235-00-066	Nameplate
NS	4	1101	Drive Screw
NS	Items Not Shown On Drawing		

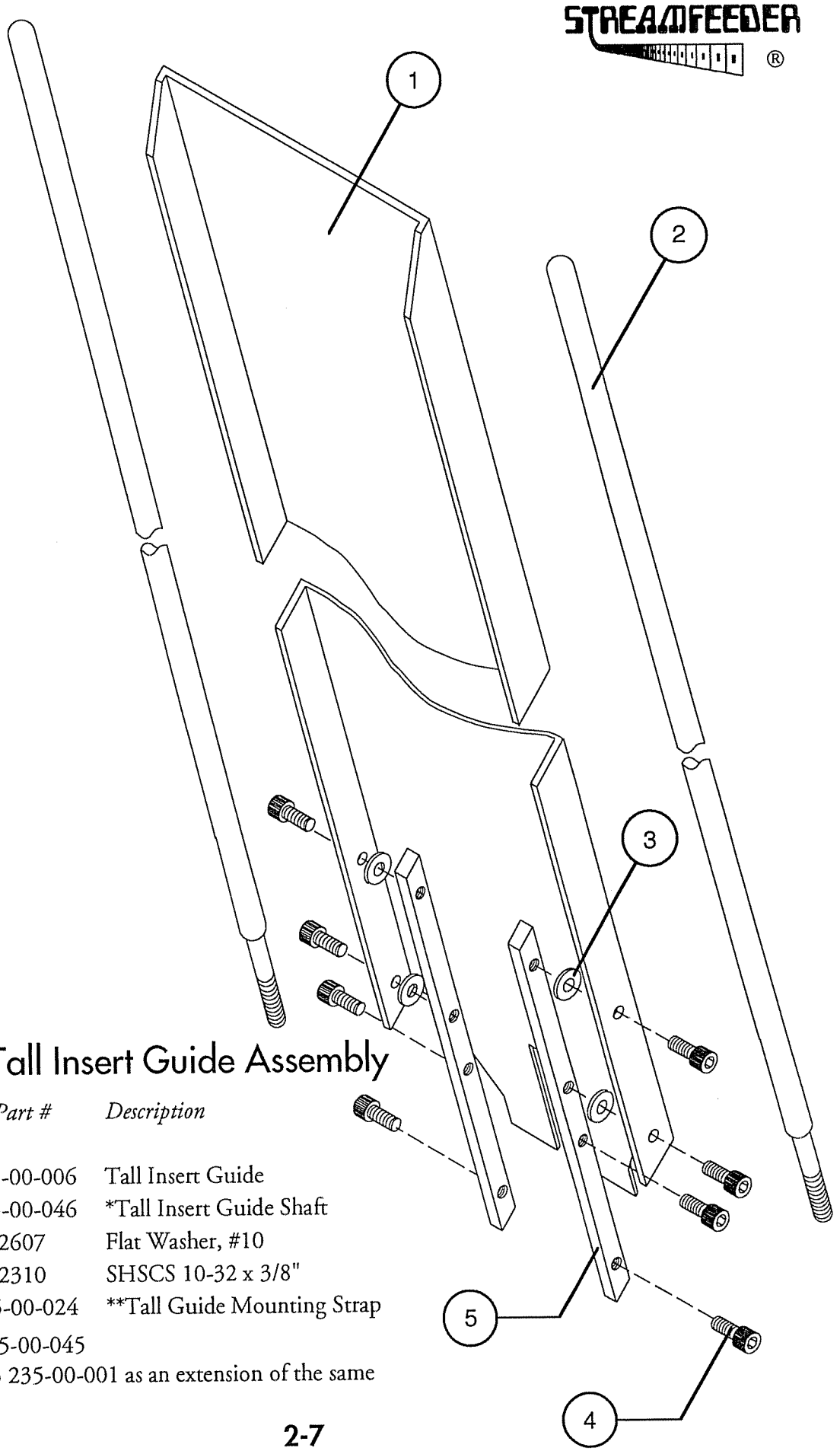

235-11-006 Tall Insert Guide Assembly

Item#	*Qty.*	*Part #*	*Description*
1	1	235-00-006	Tall Insert Guide
2	2	235-00-046	*Tall Insert Guide Shaft
3	4	2607	Flat Washer, #10
4	8	2310	SHSCS 10-32 x 3/8"
5	2	235-00-024	**Tall Guide Mounting Strap

* Replaces 235-00-045

** Attaches to 235-00-001 as an extension of the same

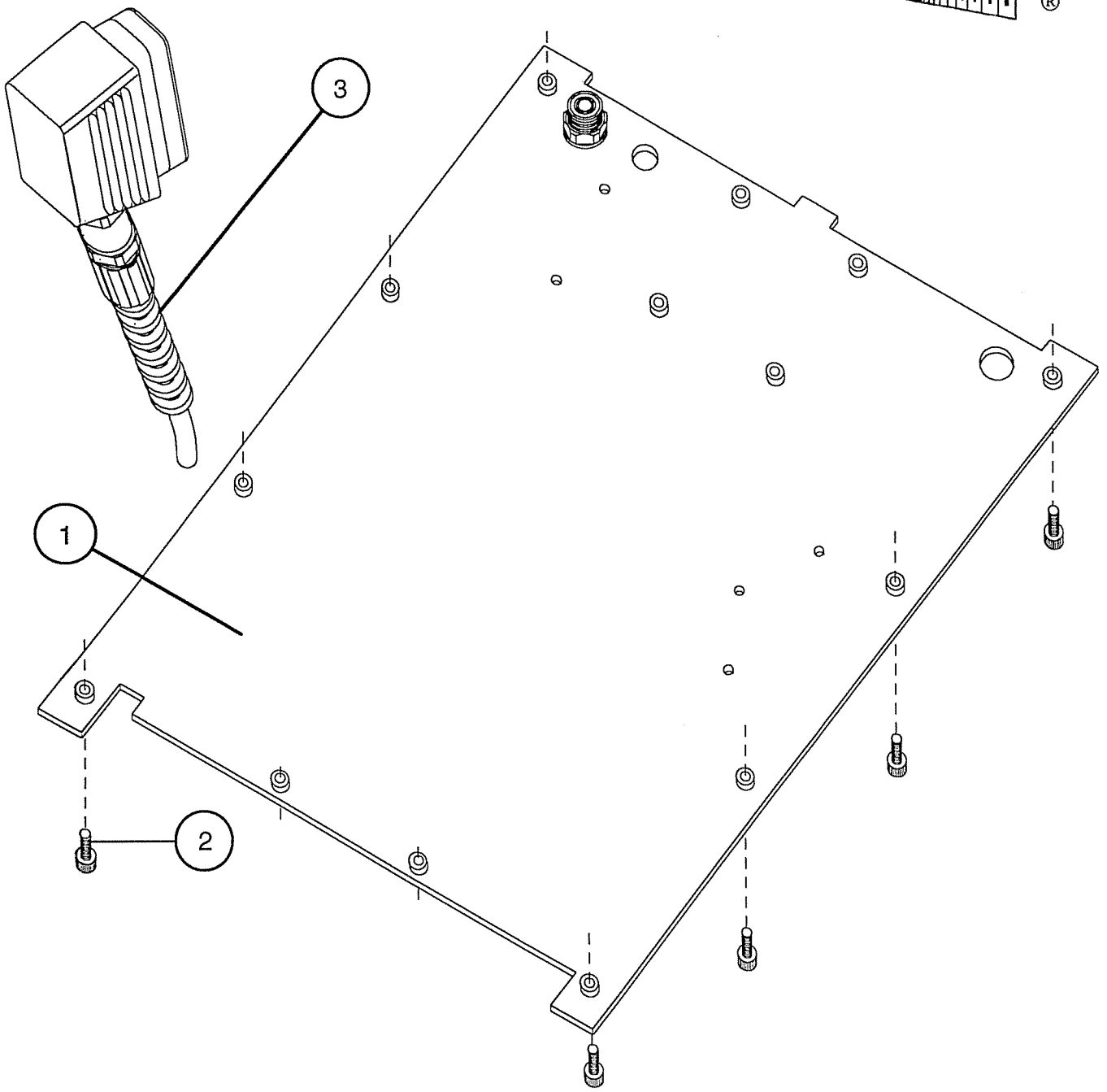

435-33-007 Base Plate Assembly

Item#	*Qty.*	*Part #*	*Description*
1	1	435-50-007	Base Plate
2	8	2310	10-32 x 3/8" SHCS
3	1	535-11-005	2 MeterPower Cord

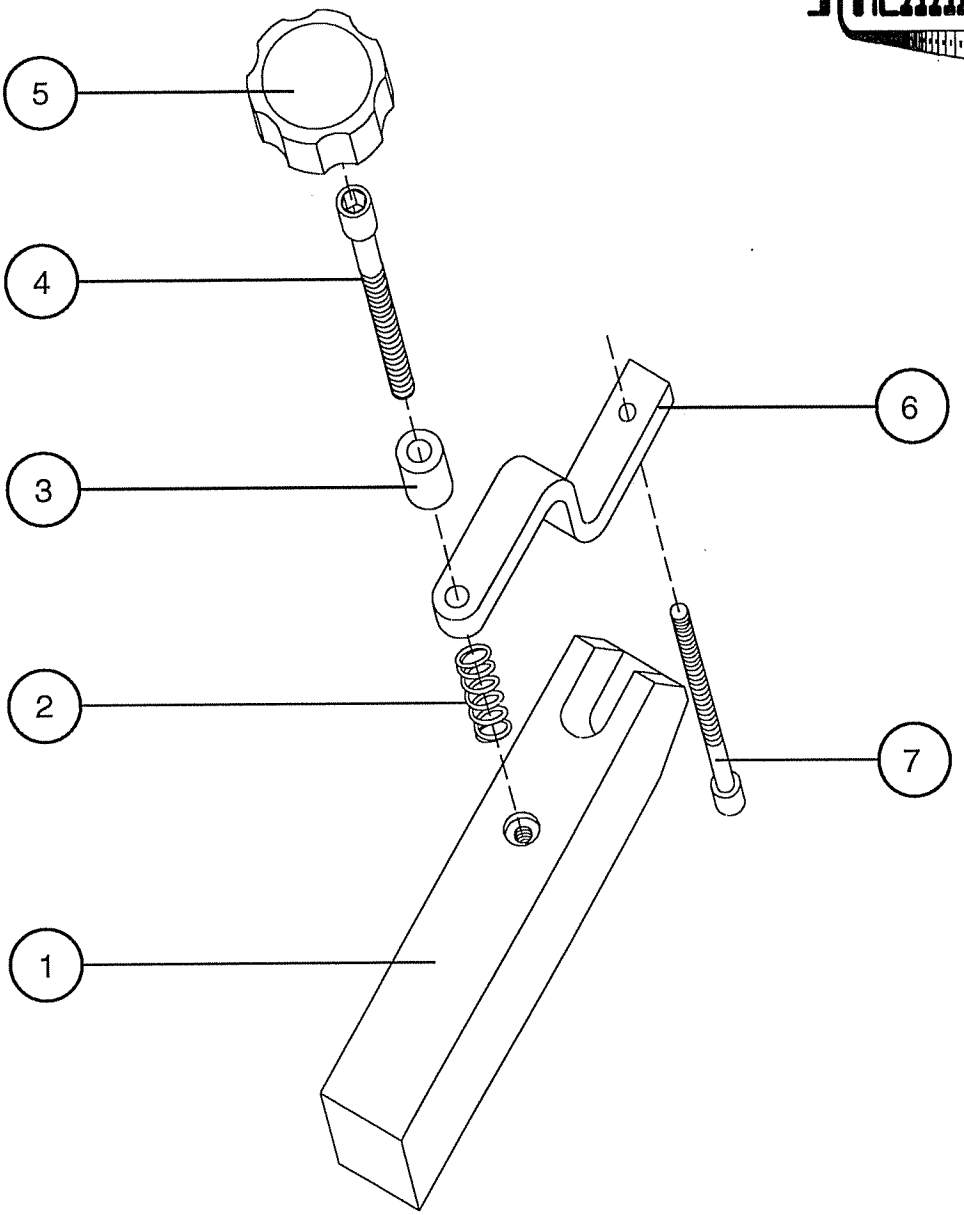

235-11-080 Material Holdown Assembly

Item#	*Qty.*	*Part #*	*Description*
1	1	235-60-080	EJ Material Holdown Bar
2	1	235-60-083	Holdown Spring
3	1	335-00-018	Spacer
4	1	2329	1/4-20x 1-3/4" SHCS
5	1	235-00-093	Large Thumb Screw
6	1	235-60-081	Holdown "Z" Bracket
7	1	2336	10-32x1-1/2" SHCS

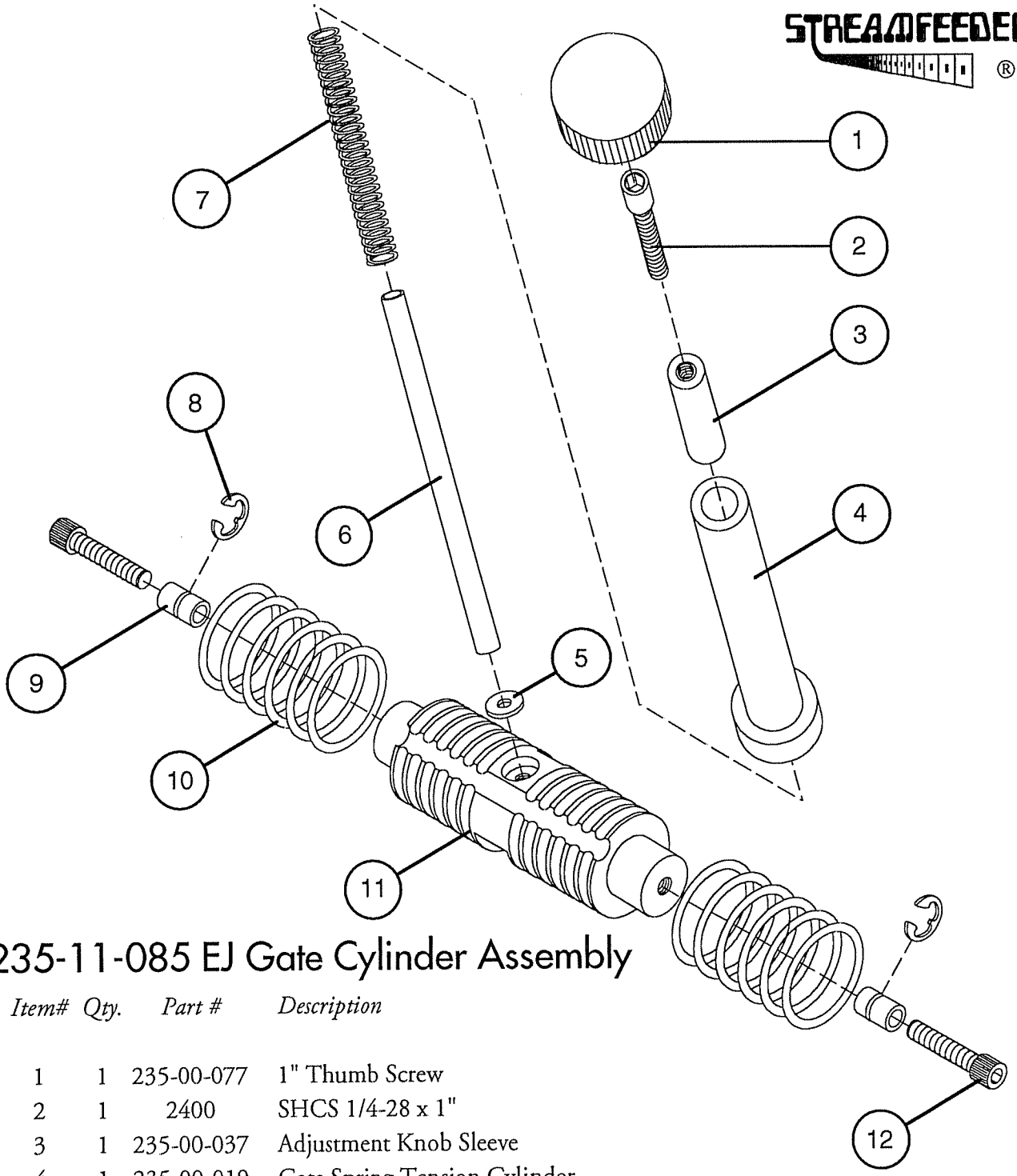

235-11-085 EJ Gate Cylinder Assembly

Item#	*Qty.*	*Part #*	*Description*
1	1	235-00-077	1" Thumb Screw
2	1	2400	SHCS 1/4-28 x 1"
3	1	235-00-037	Adjustment Knob Sleeve
4	1	235-00-019	Gate Spring Tension Cylinder
5	1	2600	Flat Washer, #8
6	1	235-60-084	EJ Gate Lift Shaft
7	1	235-00-083	Gate Compression Spring
8	2	1150	"E" Clip 3/8"
9	2	235-00-082	Spacer, 1/2"
10	12	235-00-089	Gate Cylinder O-Ring
11	1	235-60-085	EJ Gate Cylinder
12	2	2390	SHCS 1/4 x 20 x 1"

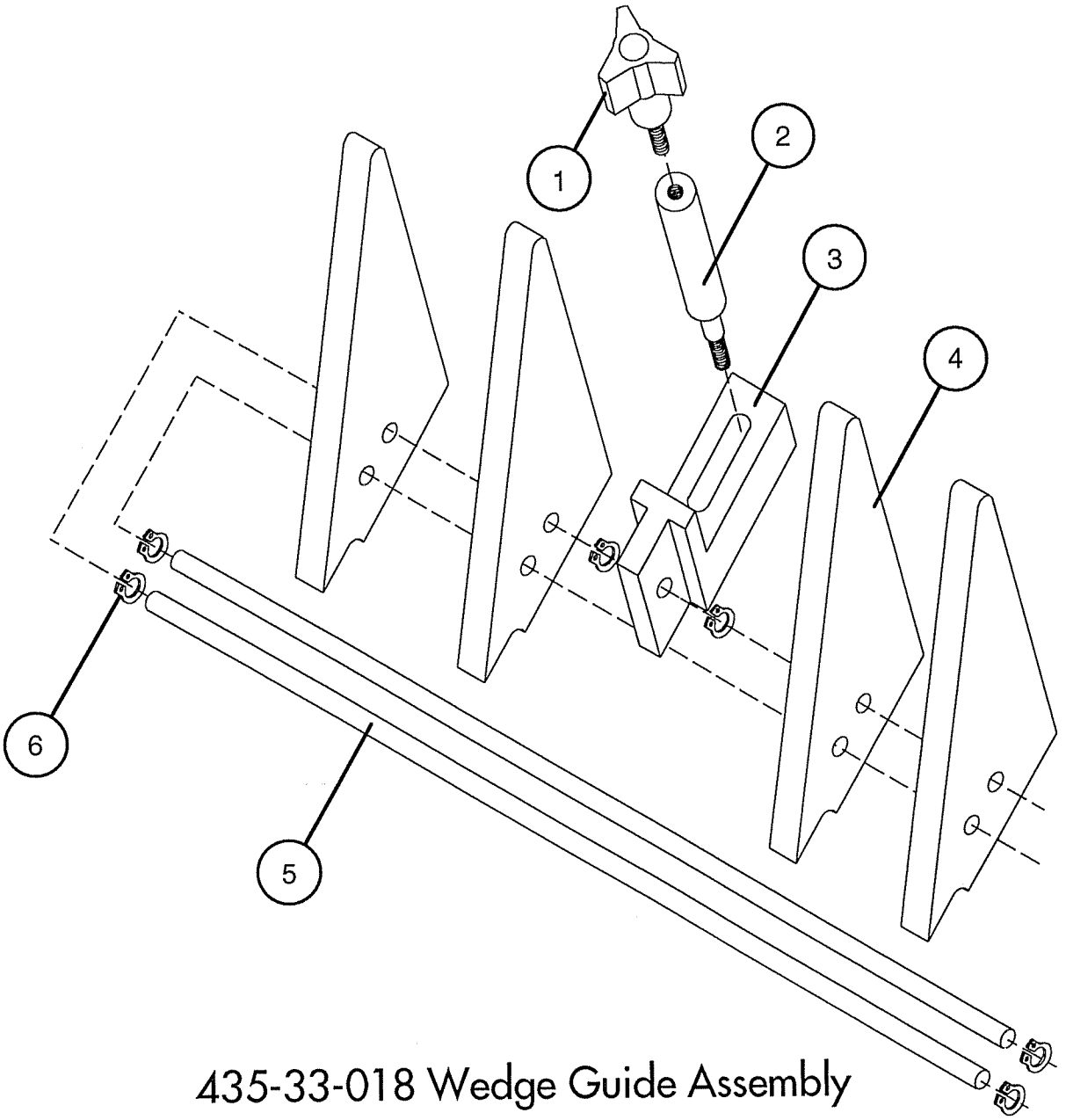

435-33-018 Wedge Guide Assembly

Item#	*Qty.*	*Part #*	*Description*
1	1	235-00-092	Medium Knob
2	1	235-00-023	Knob Extension
3	1	235-00-017	Wedge Hold Down Bracket
4	4	435-00-018	Material Support Wedge
5	2	435-50-033	Wedge Guide Shaft
6	6	1105	Grip Ring 1/4"

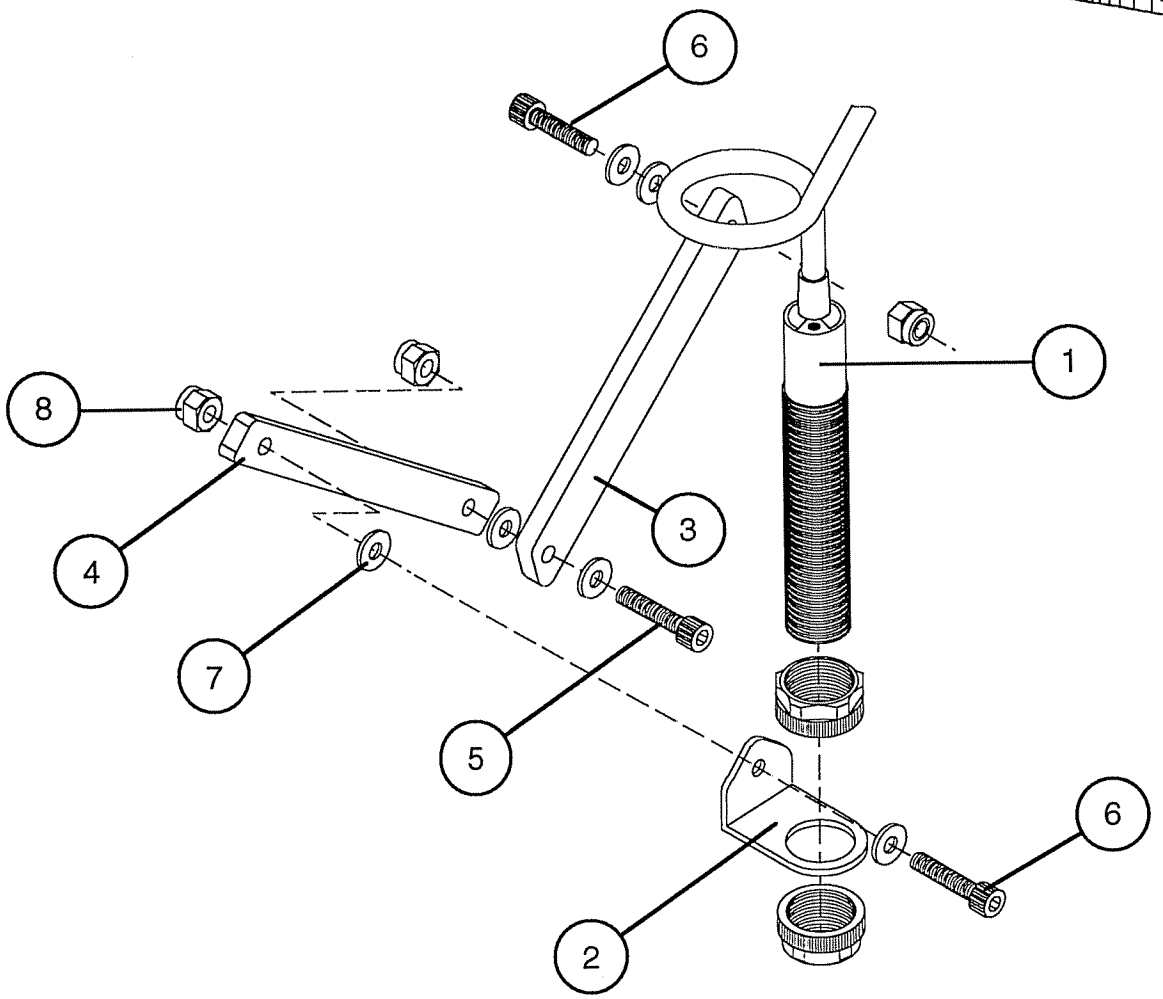

~~435-60-016~~ Sensor Extension

Item#	*Qty.*	*Part #*	*Description*
1	1	535-11-038	Proximity Sensor w/ Nuts
2	1	235-00-007	Sensor Bracket
3	1	435-00-016	Sensor Extension
4	1	235-00-015	Sensor Extension Bracket "A"
5	1	2325	SHCS 10-32 x 3/4"
6	2	2320	SHCS 10-32 x 5/8"
7	6	2607	Flat Washer #10
8	3	2110	Nylock Nut 10-32

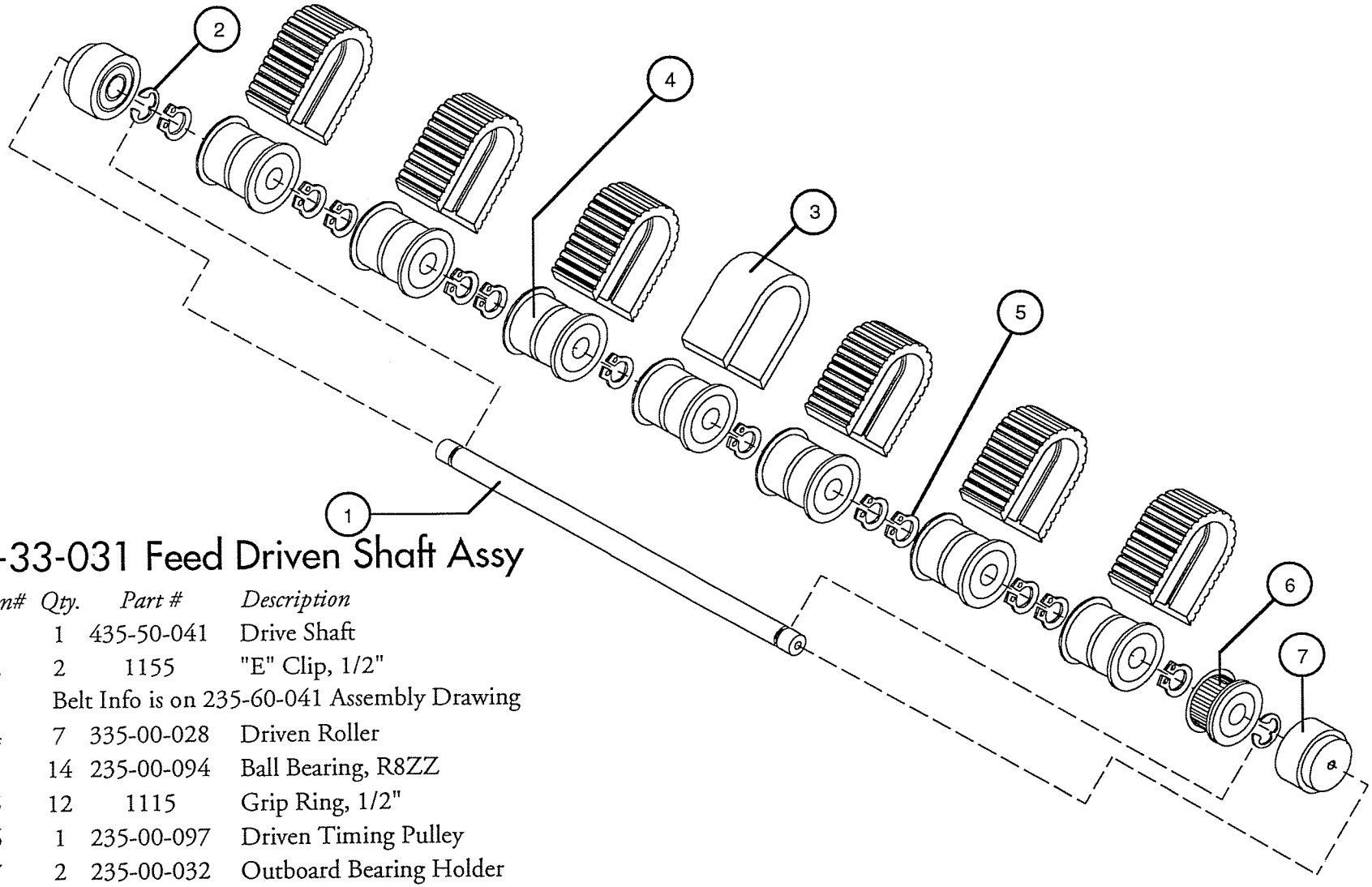

435-33-031 Feed Driven Shaft Assy

Item#	*Qty.*	*Part #*	*Description*
1	1	435-50-041	Drive Shaft
2	2	1155	"E" Clip, 1/2"
3	Belt Info is on 235-60-041 Assembly Drawing		
4	7	335-00-028	Driven Roller
	14	235-00-094	Ball Bearing, R8ZZ
5	12	1115	Grip Ring, 1/2"
6	1	235-00-097	Driven Timing Pulley
7	2	235-00-032	Outboard Bearing Holder
	2	235-00-094	Ball Bearing, R8ZZ
NS	2	2217	Socket-Head Set Screw 10-32 x 1/4" Brass Tip

STREAMFEEDER

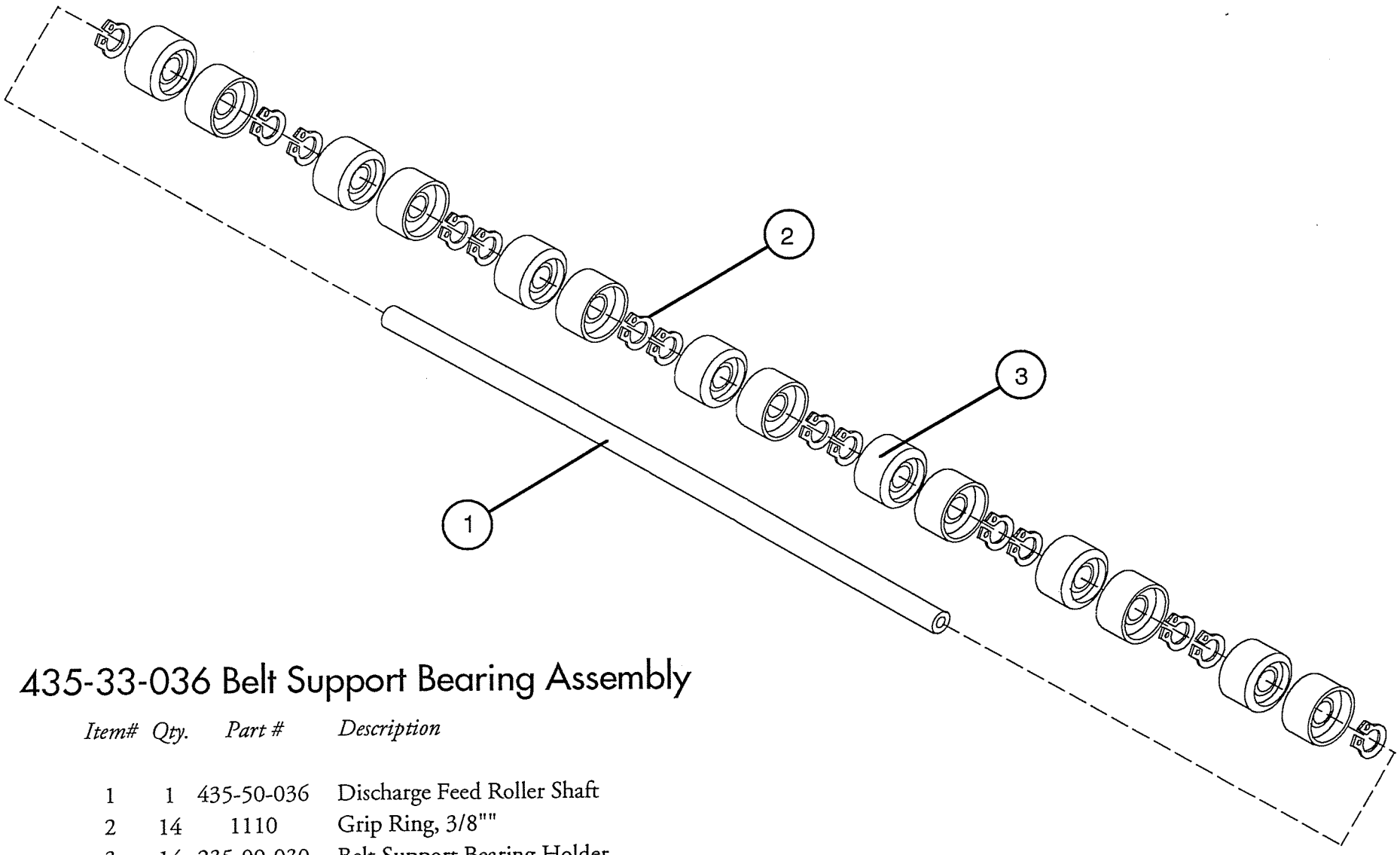

435-33-036 Belt Support Bearing Assembly

Item#	*Qty.*	*Part #*	*Description*
1	1	435-50-036	Discharge Feed Roller Shaft
2	14	1110	Grip Ring, 3/8""
3	14	235-00-030	Belt Support Bearing Holder
	14	235-00-095	Ball Bearing R6ZZ

STREAMFEEDER ®

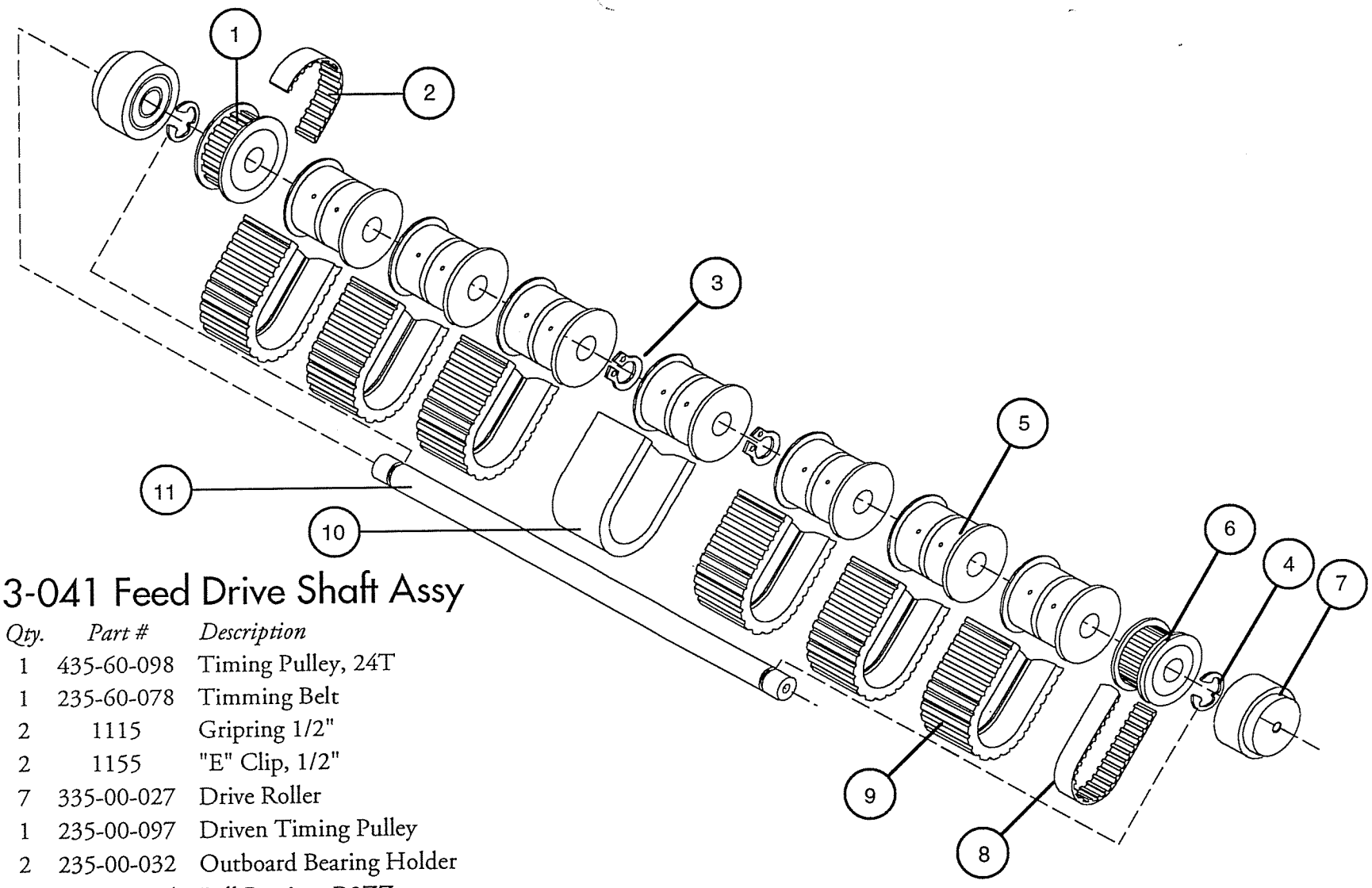

435-33-041 Feed Drive Shaft Assy

Item#	*Qty.*	*Part #*	*Description*
1	1	435-60-098	Timing Pulley, 24T
2	1	235-60-078	Timming Belt
3	2	1115	Gripring 1/2"
4	2	1155	"E" Clip, 1/2"
5	7	335-00-027	Drive Roller
6	1	235-00-097	Driven Timing Pulley
7	2	235-00-032	Outboard Bearing Holder
	2	235-00-094	Ball Bearing, R8ZZ
8	1	435-00-096	Drive Belt
9	6	235-00-108	Grooved Belt
10	1	235-00-160	Gummed Belt
11	1	435-50-041	Drive Shaft 435-55-211
NS	16	2217	Set Screw, 10-32 x 1/4" Brass Tip
NS	2	2211	Set Screw, 8-32 x 1/4" Brass Tip

NS Items Not Shown On Drawing

STREAMFEEDER ®

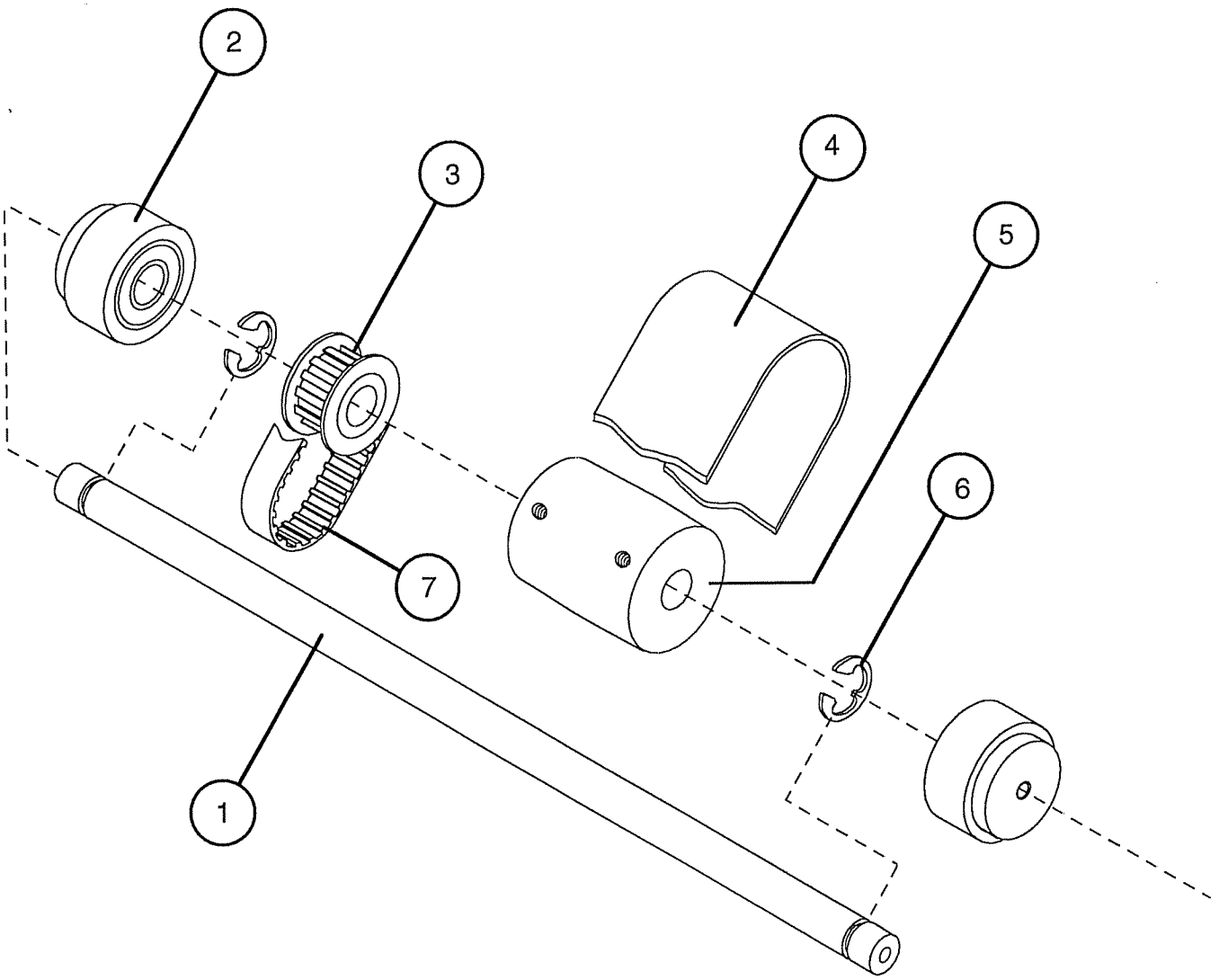

435-33-106 Upper Discharge Assist Assembly

Item#	*Qty.*	*Part #*	*Description*
1	1	435-50-041	Drive Shaft
2	2	235-00-032	Outboard Bearing Holder
	2	235-00-094	Ball Bearing, R8ZZ
3	1	435-60-097	Timing Pulley, 16T
4	1	235-60-088	Clear Urethane Belt
5	1	235-60-106	Crown Pulley w/ Set Screws
6	2	1155	"E" Clip, 1/2"
7	Timing Belt Information is on the 435-60-041 Assembly Drawing		
NS	2	2327	Set Screws, 1/4- 20 x 1/2"
NS	2	2402	Set Screws, 8-32 x 1/8"
NS	Items Not Shown On Drawing		

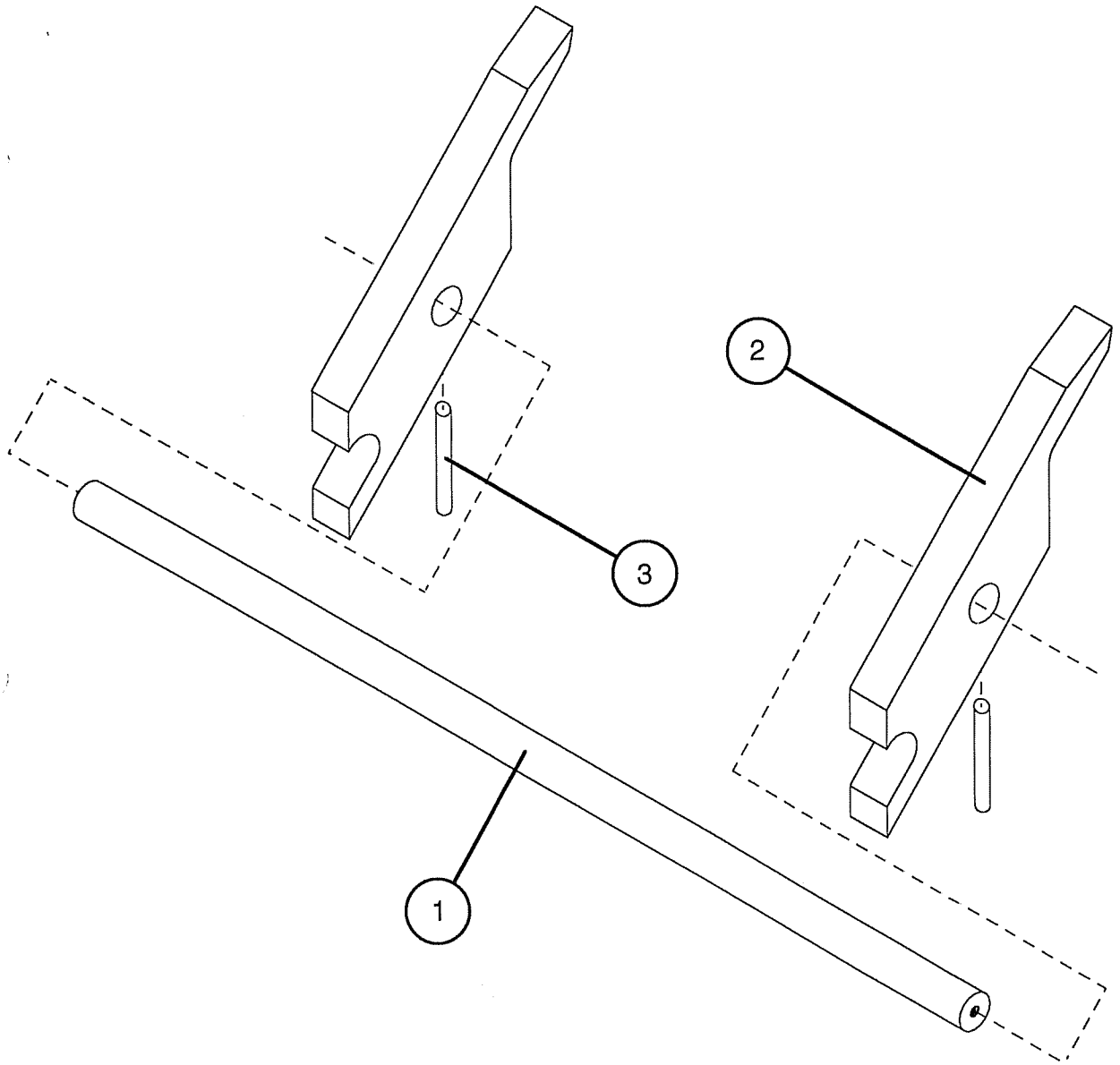

435-33-082 Material Support Assembly

Item#	*Qty.*	*Part #*	*Description*
1	1	435-55-047	Idler Shaft
2	2	235-60-082	Material Support Slide Rail
3	2		O-Ring Stock, 3/16" Dia.

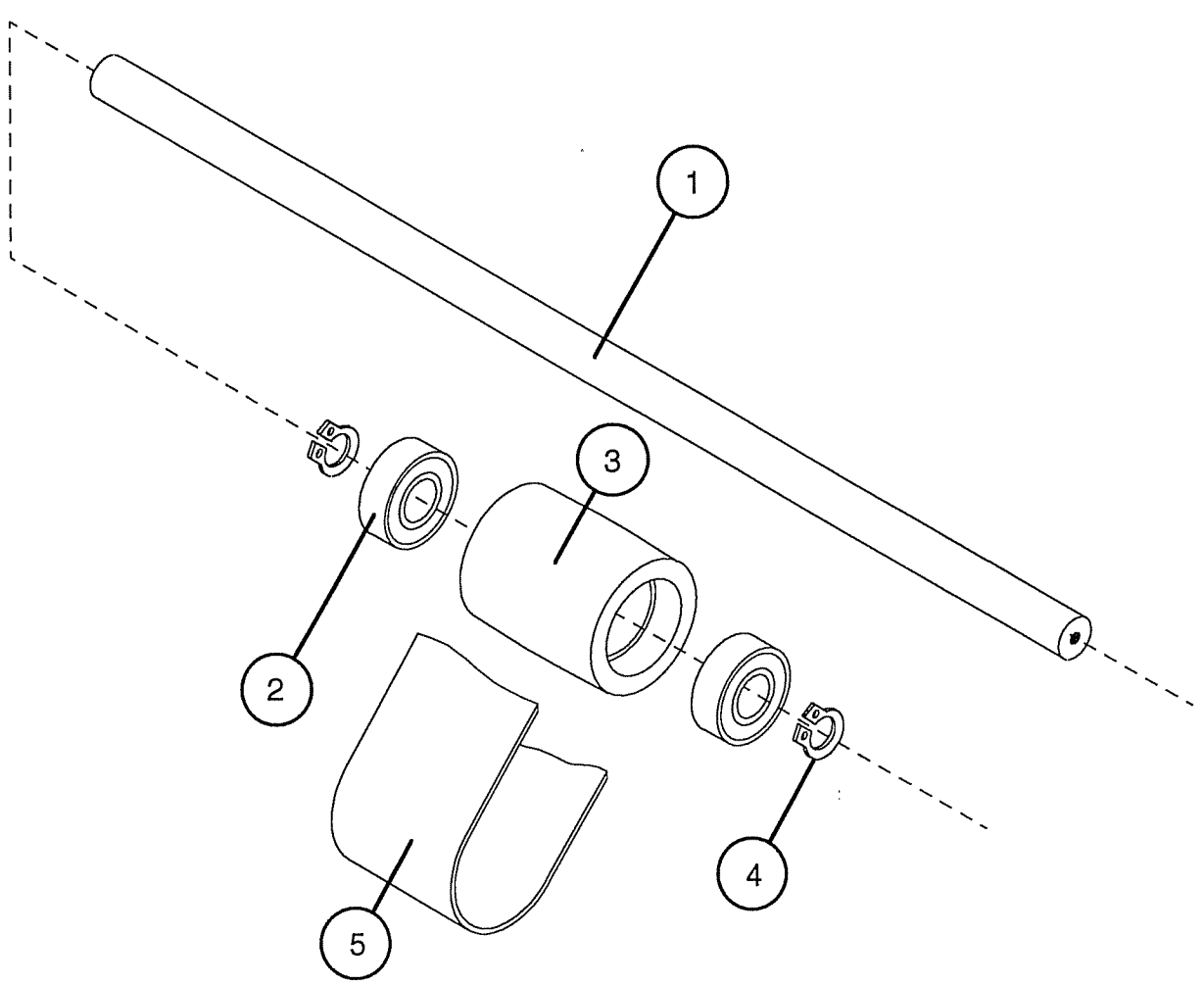

435-33-105 Lower Discharge Assist Assembly

Item#	*Qty.*	*Part #*	*Description*
1	1	435-55-047	Idler Shaft
2	2	235-00-094	Ball Bearing, R8ZZ
3	1	235-60-105	Crown Pulley-Bearing Cup
4	2	1115	Grip Ring, 1/2"
5	Belt Information is on the 435-60-106 Assembly Drawing		

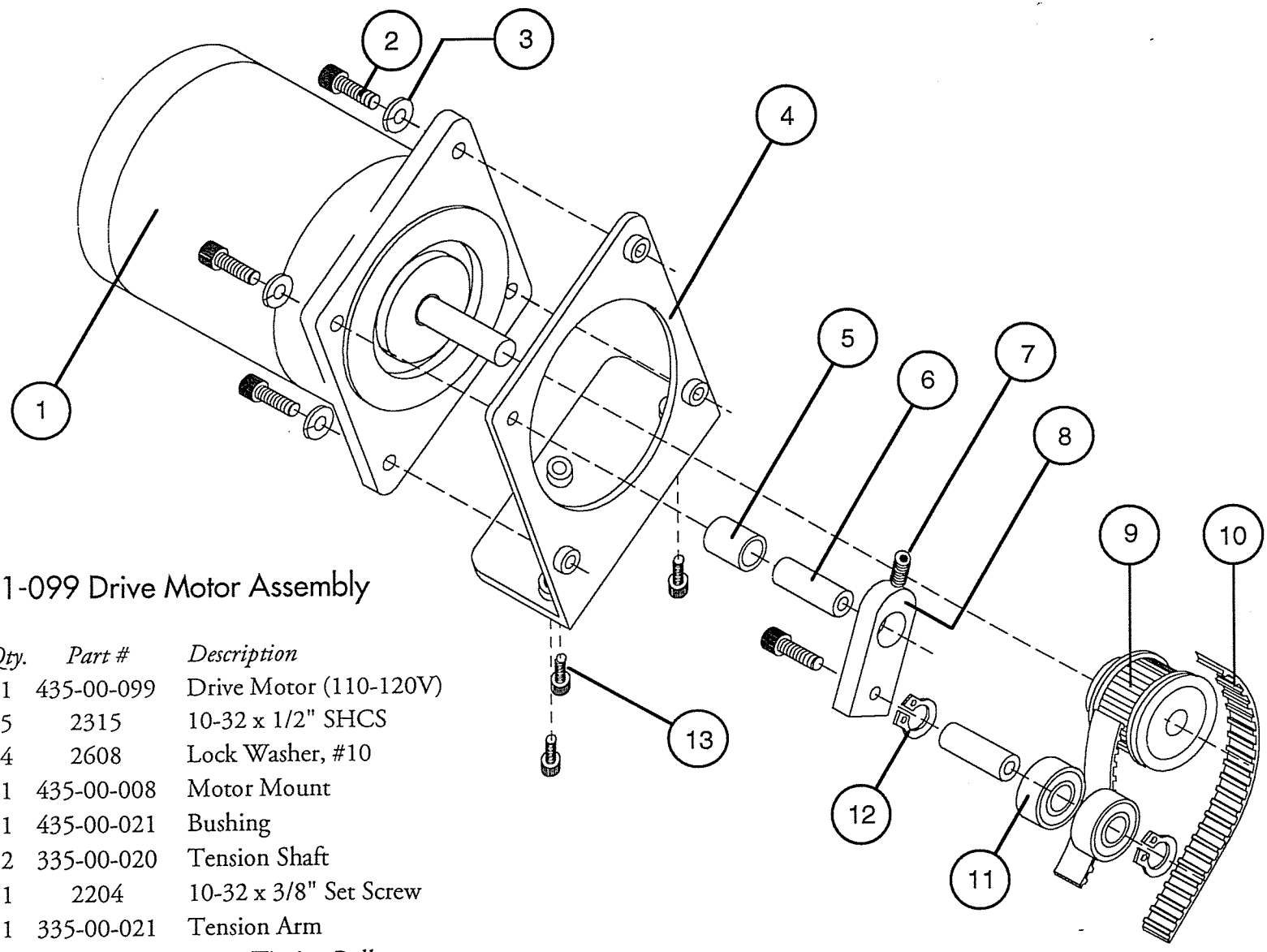

435-11-099 Drive Motor Assembly

Item#	*Qty.*	*Part #*	*Description*
1	1	435-00-099	Drive Motor (110-120V)
2	5	2315	10-32 x 1/2" SHCS
3	4	2608	Lock Washer, #10
4	1	435-00-008	Motor Mount
5	1	435-00-021	Bushing
6	2	335-00-020	Tension Shaft
7	1	2204	10-32 x 3/8" Set Screw
8	1	335-00-021	Tension Arm
9	1	435-00-098	Drive Timing Pulley
10	Drive Belt Info. is on 435-11-041 Assembly Drawing		
11	2	235-00-095	Ball Bearing, R6ZZ
12	2	1110	Grip Ring, 3/8"
13	3	2310	10-32 x 3/8" SHCS

STREAMFEEDER ®

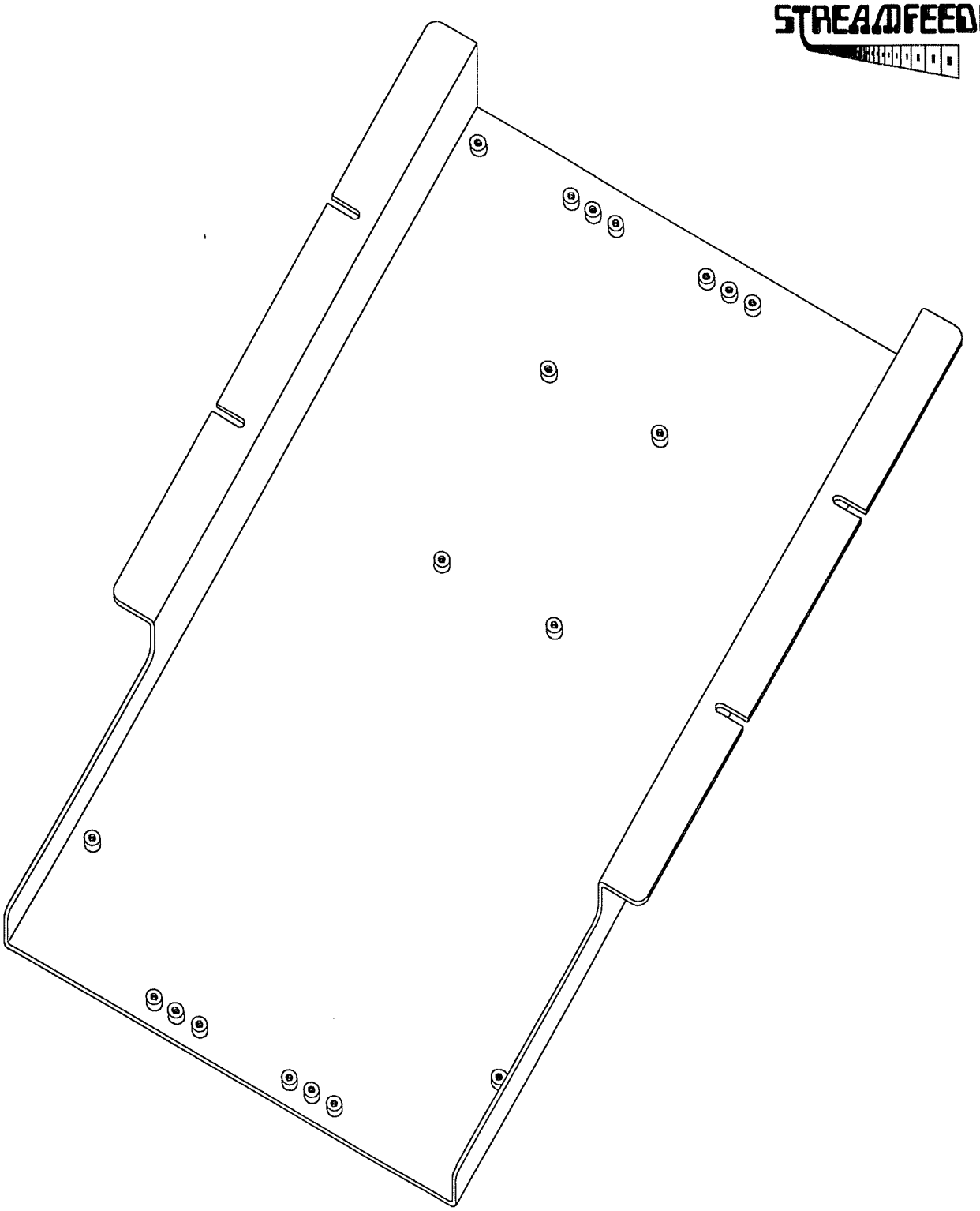

435-60-001 Model 3 Ejector Plate

Streamfeeder®
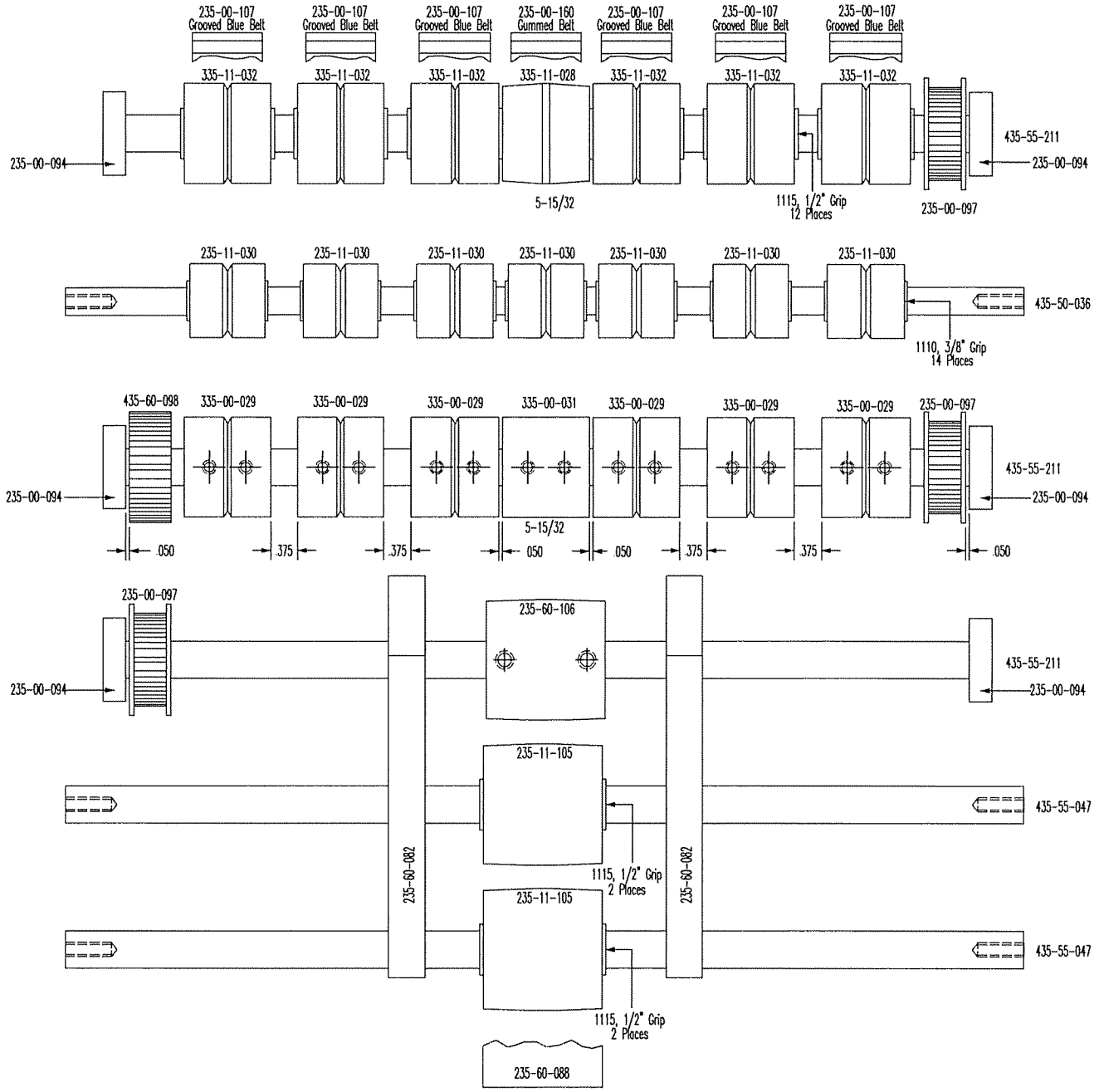
MOD III EXEJ Belt Configuration